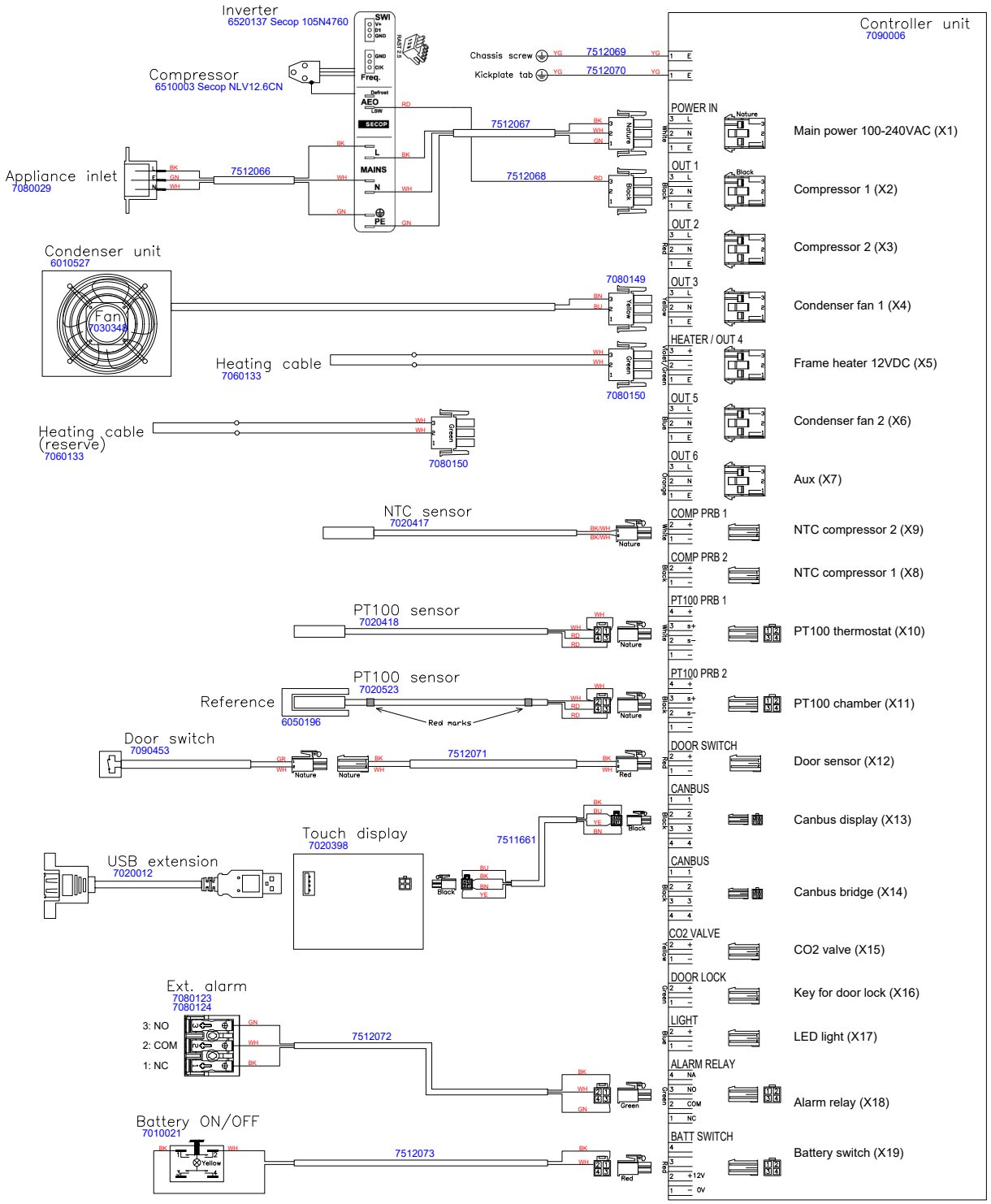

-	Farvekode	Colour Code	Farbkode
BN	Brun	Brown	Braun
BU	Blå	Blue	Blau
BK	Sort	Black	Schwarz
LI	Lilla	Lilac	Lila
YE-GN	Gul / grøn	Yellow / green	Gelb / grün
WH	Hvid	White	Weiss
RD	Rød	Red	Rot
OR	Orange	Orange	Orange

Title: Wire diagram for P90MV

ARCTIKO
true cooling specialists
Oddesundvej 39
6715 Esbjerg N, Denmark
Tel.: +45 7020 0328
www.arctiko.com

Drawing no.:	5086115	Revision:	01
Drawing (initials):	DS	Date:	27/08/2023
Approval:			

All rights to this drawing belong to Arctiko A/S.